CAD FILE:

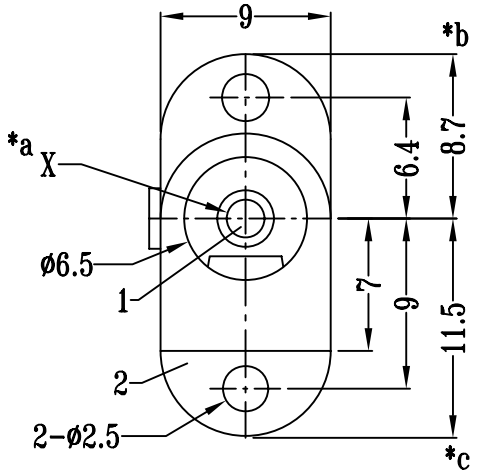

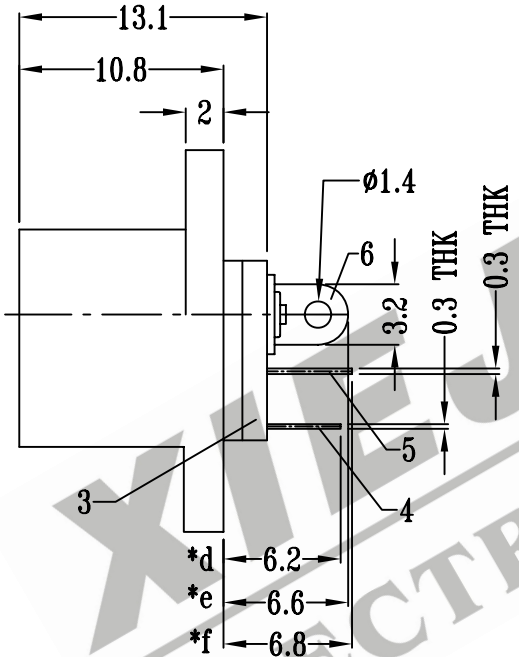

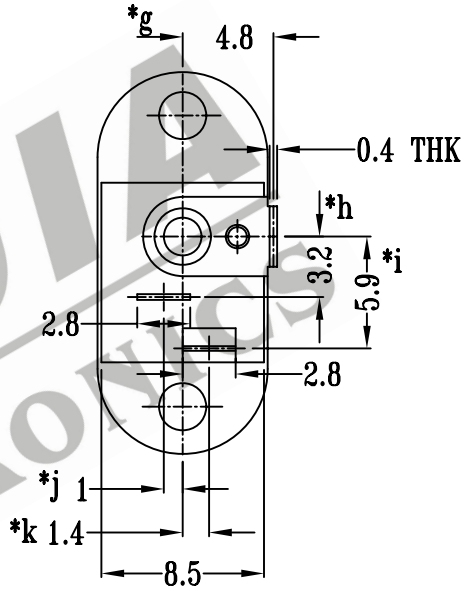

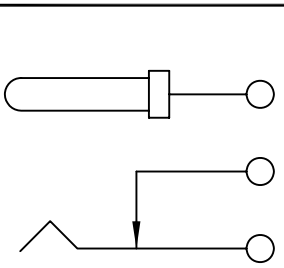

SCHEMATIC

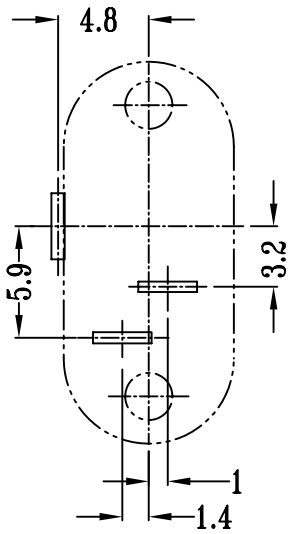

P.C.B LAYOUT

XIEJIA ELECTRONICS

DIA.OF PIN "X" A=2.5mm
DIA.OF PIN "X" B=2.0mm
DIA.OF PIN "X" C=2.35mm

注:带"*"表示关键尺寸(11个)

DIA. OF PIN 'X' A=2.5mm
DIA. OF PIN 'X' B=2.0mm
DIA. OF PIN 'X' C=2.35mm

NO.	PARTS	MATERIALS	Q'TY	FINISH
8				
7				
6	CONTACT	BRASS STRIP	1	Ag PLATED OVER Ni PLATED
5	TERMINAL	BRASS STRIP	1	Ag PLATED OVER Ni PLATED
4	SPRING TERMINAL	PBS STRIP	1	Ag PLATED OVER Ni PLATED
3	BASE	PBT	1	BLACK
2	CASE	PC	1	BLACK
1	PLUG PIN	BRASS	1	Ni PLATED

TOLERANCE UNLESS SPECIFIED
WITHIN: 1.5±0.1mm
OVER : 1.5±0.2mm

SHENZHEN XIEJIA ELECTRONICS CO.,LTD.

ISSUE	DATE	DESCRIPTIONS OF REVISION	APPD.

TITLE : DC POWER JACK

UNIT : mm

DRWG NO.: XJ-DR-DS204-00

MODEL: DS-204

SCALE: 5:2

ALL MATERIALS MUST BE COMPLIANT TO ROHS

DWN.	ZHOUYU	2004-7-28
CHK'D	FANGYING	2004-7-28
APPD.	KANGXINAN	2004-7-28